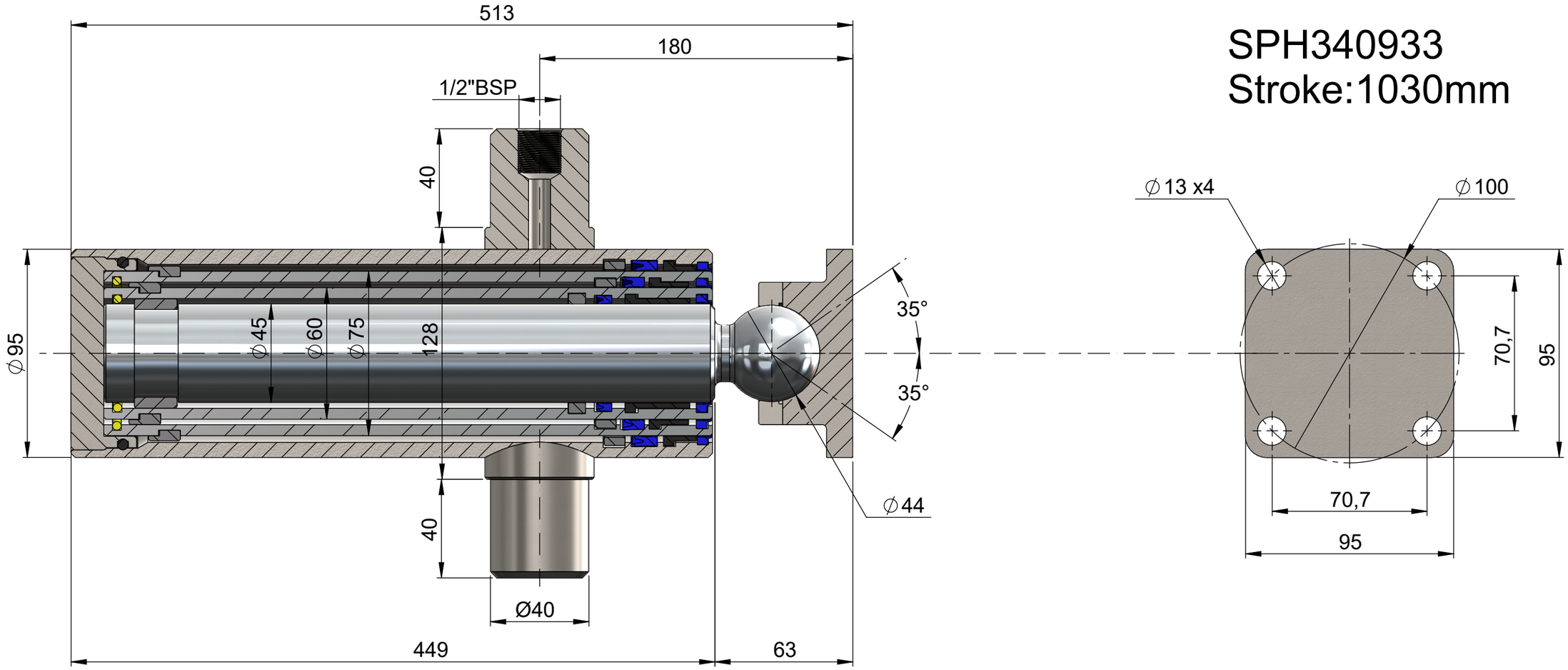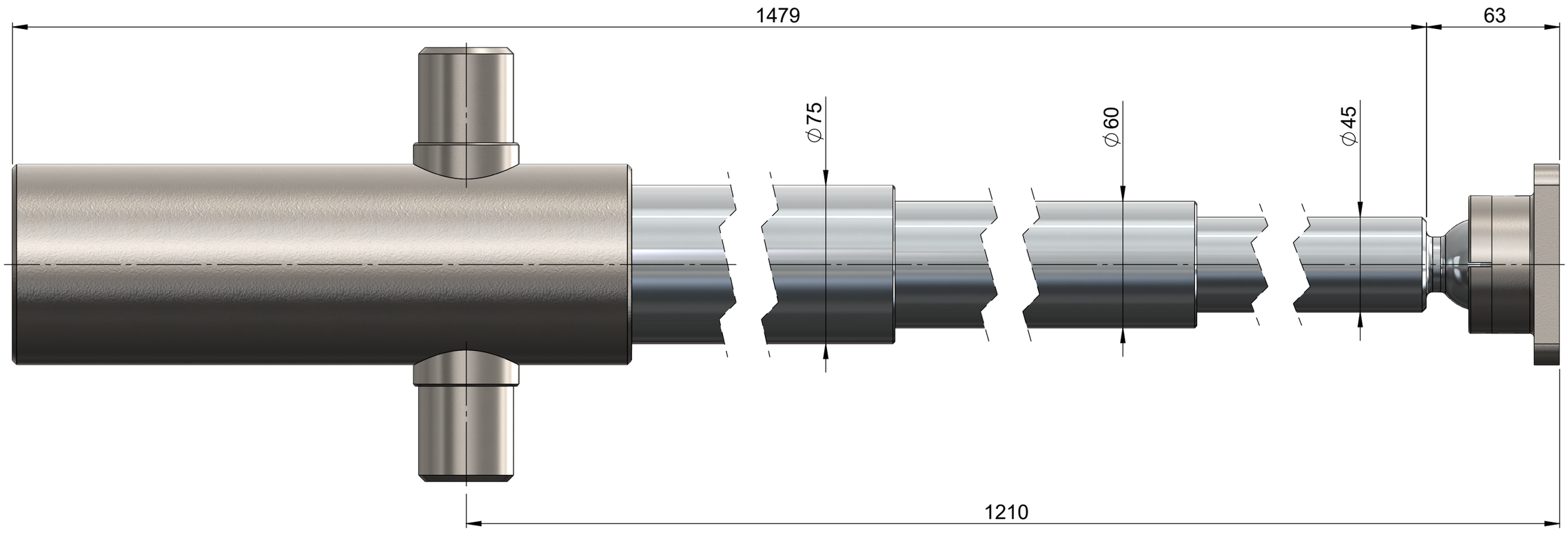SPH340933
Stroke:1030mm