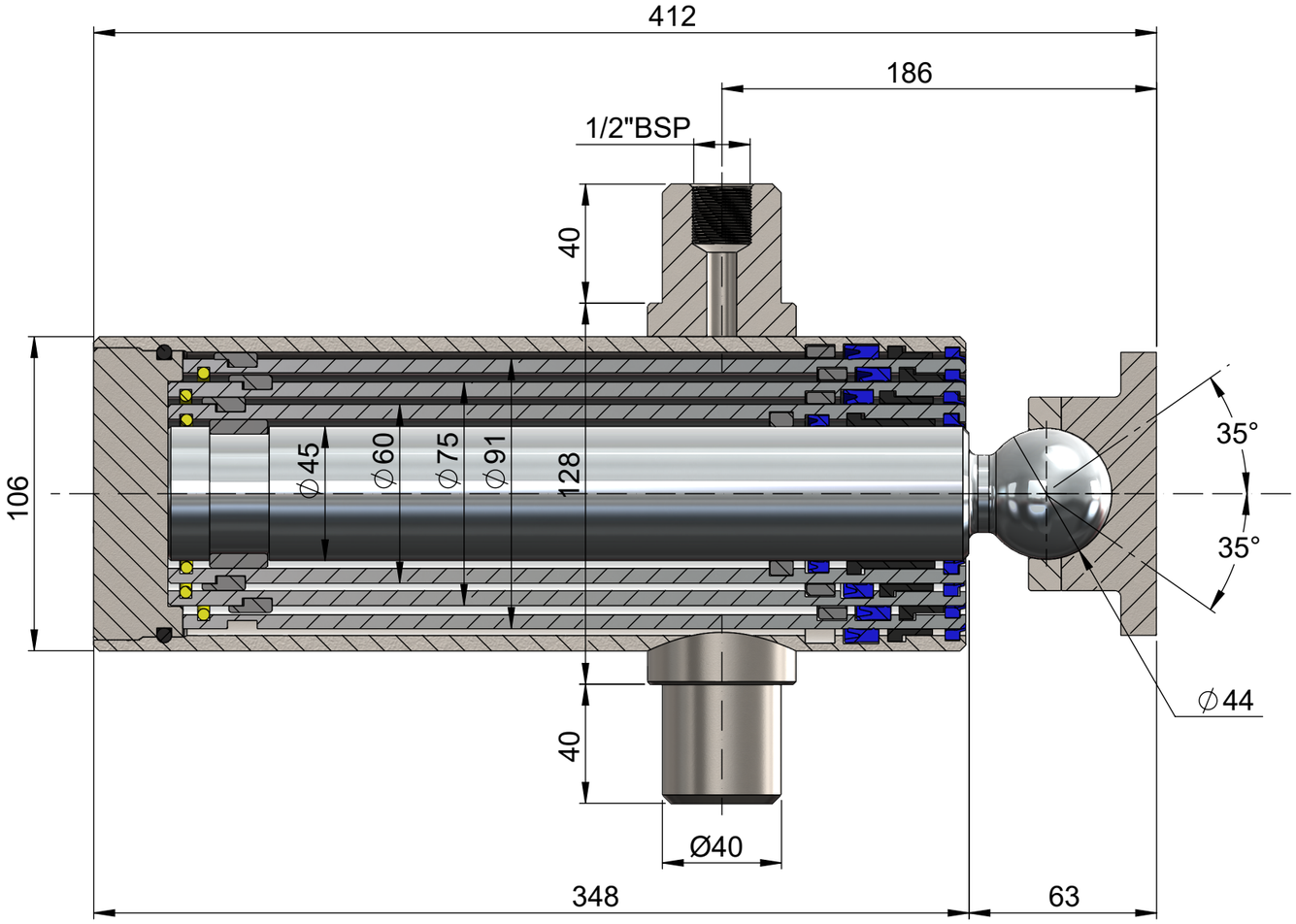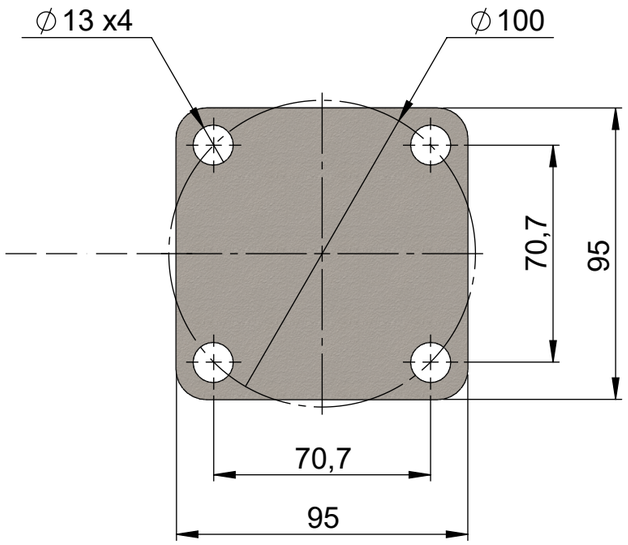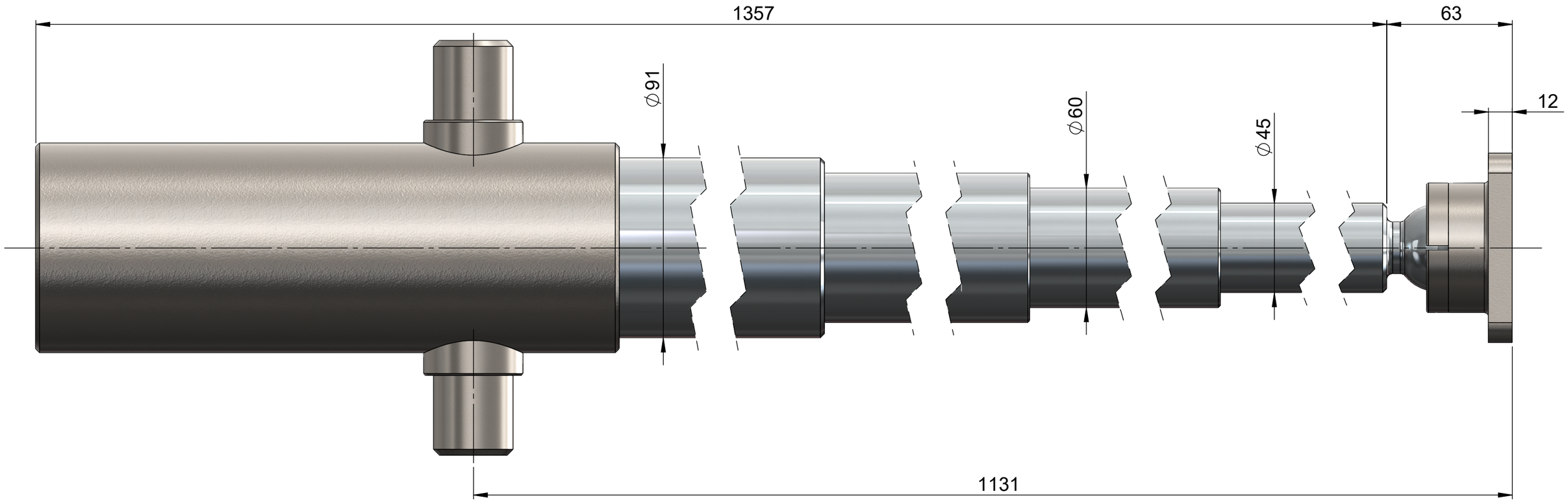SPH340935
Stroke:945mm